# D 50A27, D50P27
## CABLE DRIVE TUB WASTES

D50A27( Color-black),1-1/2” Schedule 40 Abs Cable Driven Bath Waste. Consists Of Brass Handle, Backplate,pop-up,strainer Plate And 27” Cable Assembly.
All Glue Type. Tubes Not Included.

D50P27(Color-white) 1-1/2” Schedule 40 Pvc Cable Driven Bath Waste. Consists Of Brass Handle, Backplate,pop-up,strainer Plate And 27” Cable Assembly.
All Glue Type. Tubes Not Included.

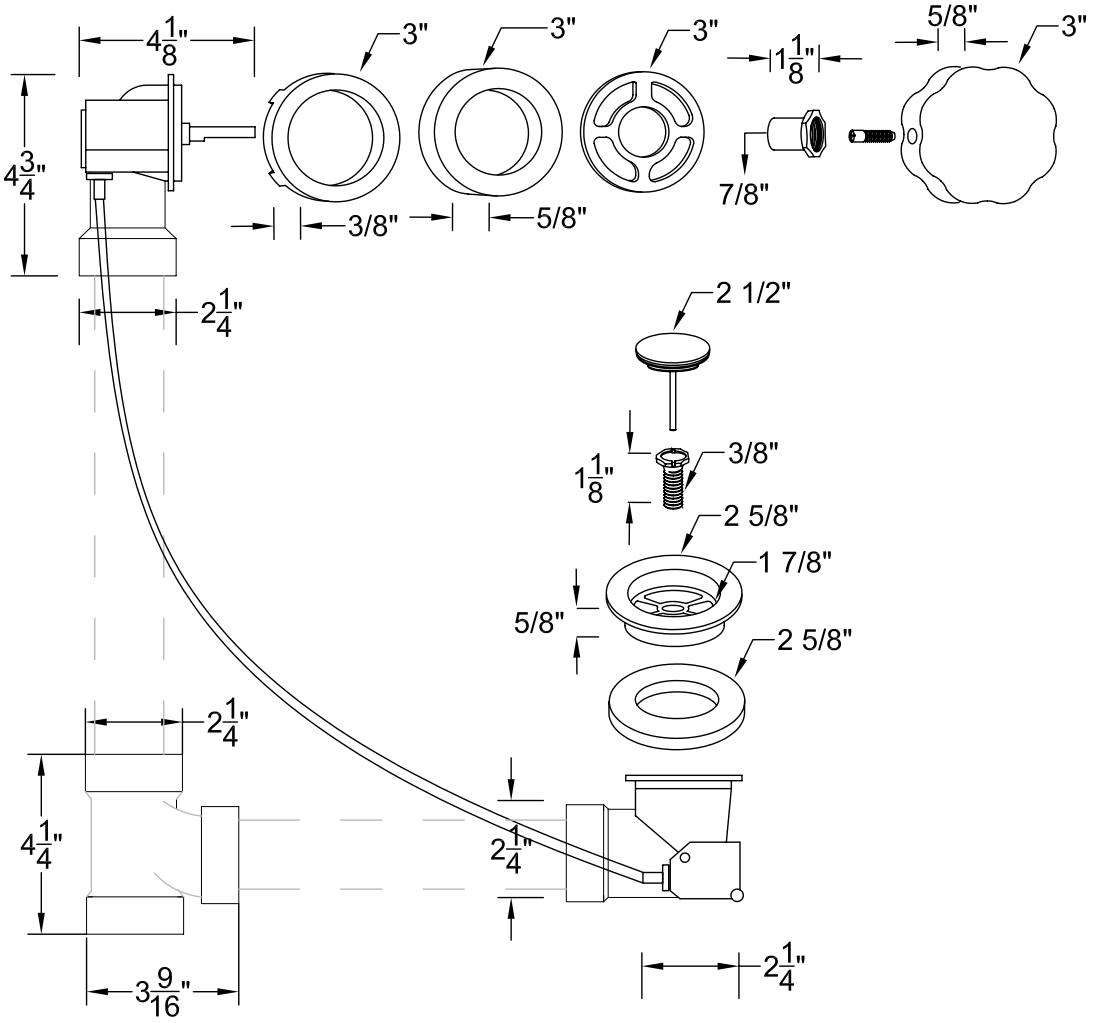



WESTBRASS

2429 E. Olympic Blvd. Los Angeles, CA 90021
Phone: 213-627-8441 Fax: 213-627-2844
www.westbrass.com info@westbrass.com