D271

INSTANT HOT WATER DISPENSERS

D 271 Velosah instant hot & cold water faucet with auto-off handle function.
IWC-1 Chiller optional. Must be installed with QHT-1 hot water tank.
Polished Chrome, Satin Nickel, Oil Rubbed Bronze and Antique Copper only.

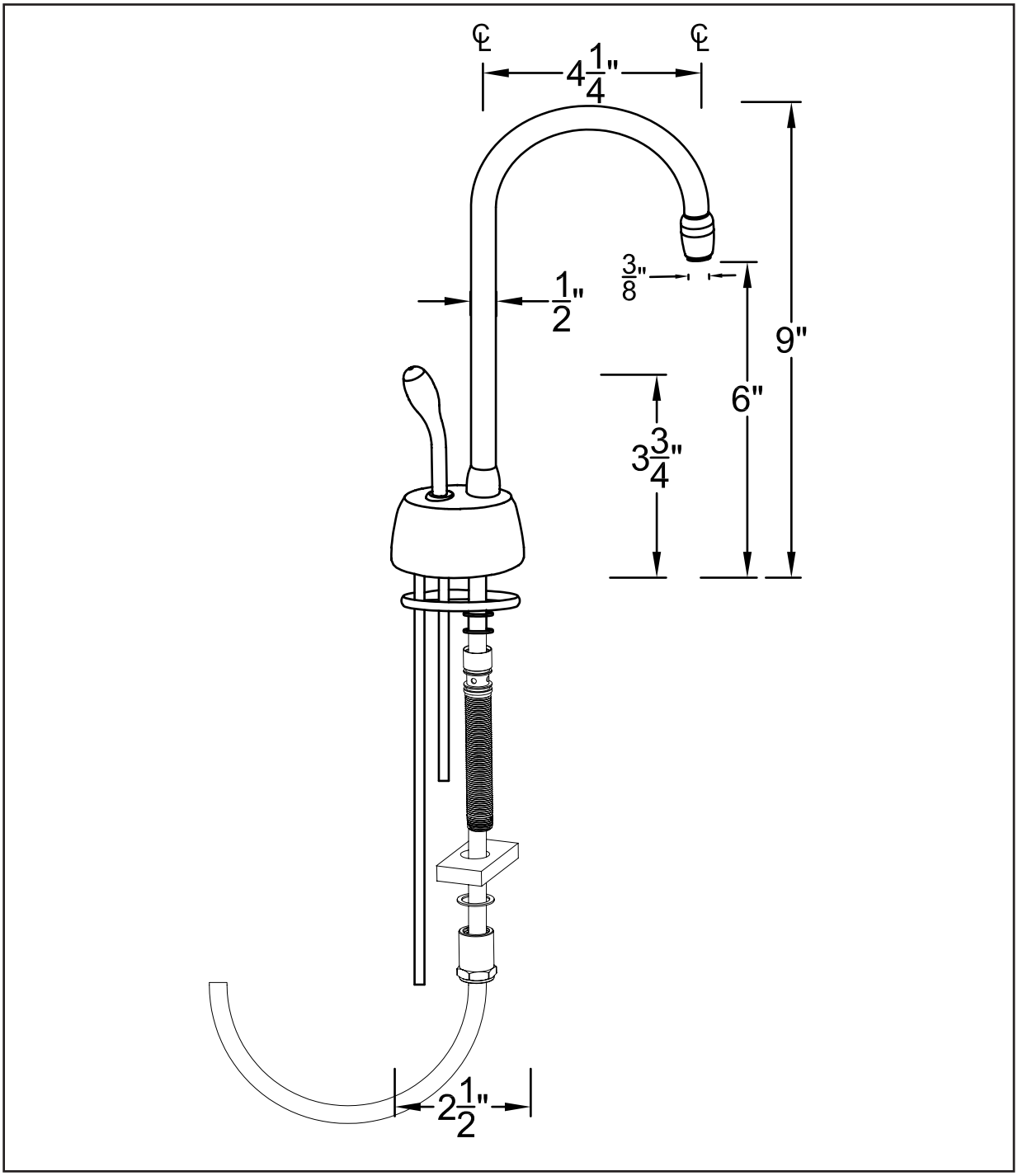

WESTBRASS

2429 E. Olympic Blvd. Los Angeles, CA 90021
Phone: 213-627-8441 Fax: 213-627-2844
www.westbrass.com info@westbrass.com